e-lite star™
an eoi brand - energy saving since 1995

SB1 Shoebox

Ordering Information

ESU	-	B	A01	3M	040	50	M	525
e-lite star LED Lighting		Product Series: **B** – SB1 Shoebox	Input Voltage: **A01** – 120~277 VAC; **A02** – 347~480 VAC	Lateral Light Distribution: **3M** – Type III Medium	LED Number: **040** – 40 LEDs	Color Temperature: **42** – 4200K; **50** – 5000K	Luminaire Type: **M** – 4-Modules	LED Driving Current: **525** – 525 mA; **700** – 700 mA

Specifications

Number of LEDs	40							
Luminous Flux (lm) (Typ.)	6750	8700	6750	8700	6750	8700	6750	8700
Power Consumption (W) (Typ.)	70	95	70	95	70	95	70	95
Operating Voltage Range (VAC)	120 ~ 277 (50 / 60 Hz)				347 ~ 480 (50 / 60 Hz)			
Correlated Color Temperature (CCT) (K) (Typ.)	4200		5000		4200		5000	
Beam Pattern	Type III							
Color Rendering Index (CRI)	> 70							
LED Driving Current (mA)	525	700	525	700	525	700	525	700
Power Factor (PF)	> 0.9 at full load							
IP Rating	IP66 (for light engine)							
Housing	Aluminum Die Casting							

Dimensions

2-Modular Luminaire

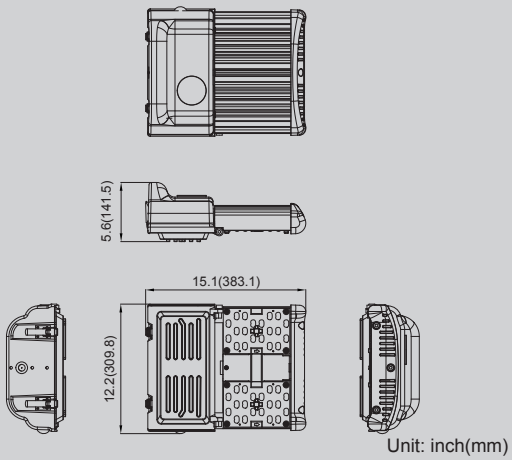

Unit: inch(mm)
Weight: 13.2 lbs

Photometric

Type III

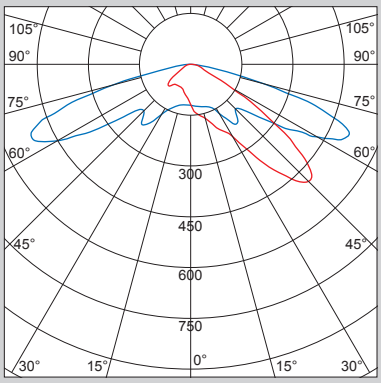

EXCELLENCE OPTO. INC.
EOI Group
1663 West 2nd Street, Pomona, CA 91766, U.S.A.
Tel: 909-784-3333 Fax: 909-784-3330
http: //www.eoius.com Sales@eoius.com
http: //www.e-litestar.com Sales@e-litestar.com